CATTARAUGUS COUNTY OFFICE OF EMERGENCY SERVICES
303 Court Street
Little Valley, NY 14755

Christopher J. Baker
Director of O.E.S.
County Fire Coordinator
716-938-2240
CJBaker@cattco.org

Catherine L. Gross
Assistant to the Director
716-938-2213
CLGross@cattco.org

Naomi A. Gennings
NIMS Coordinator
716-938-2212
NAGennings@cattco.org

Robert F. Kuhn
EMS Coordinator
716-938-2244
RFKuhn@cattco.org

Brian M. Walters, D.O.
Medical Director
716-938-2244
BWalters@BRMC.com

Office Fax Number:
716-938-9170

Online at:
www.cattco.org/
emergency-services

Public Notice: Face Coverings

As per the Governor's Executive Order issued on April 12, 2020, Essential businesses, as well as state and local government agencies and authorities, must procure, fashion, or otherwise obtain ***face coverings*** and provide such coverings to employees who ***directly*** interact with the public during the course of their work at no-cost to the employee.

Cattaraugus County Office of Emergency Services recommends essential businesses to utilize the compiled list of resources below to procure face coverings. Supplies are limited within the County and are prioritized for healthcare workers and first responders.

Executive Order 202.16, issued on April 12, 2020, provides the following directive:

For all essential businesses or entities, any employees who are present in the workplace shall be provided and shall wear face coverings when in direct contact with customers or members of the public. Businesses must provide, at their expense, such face coverings for their employees. This provision may be enforced by local governments or local law enforcement as if it were an order pursuant to section 12 or 12-b of the Public Health Law. This requirement shall be effective Wednesday, April 15 at 8 p.m.

Some key points:

•Businesses are deemed essential by the Empire State Development Corporation (ESD), pursuant to the authority provided in Executive Order 202.6. Please visit the ESD website for specific information on essential businesses.

• Face coverings include, but are not limited to, cloth (e.g. homemade sewn, quick cut, bandana), surgical masks, N-95 respirators, and face shields. Please visit the Centers for Disease Control and Prevention's "Coronavirus Disease 2019 (COVID-19)" website for information on cloth face covers and other types of personal protective equipment (PPE), as well as instructions on use and cleaning.

• Direct interaction with the public shall be determined by the employer, but, at a minimum, shall include any employee who is routinely within close contact (i.e. six feet or less) with members of the public, including but not limited to customers or clients.

• Employees are allowed to use their own face coverings, but shall not be mandated to do so by their employer

• Employees are required to wear face coverings when in direct contact with members of the public, except where doing so would inhibit or otherwise impair the employee's health

CATTARAUGUS COUNTY OFFICE OF EMERGENCY SERVICES
303 Court Street
Little Valley, NY 14755

Christopher J. Baker
Director of O.E.S.
County Fire Coordinator
716-938-2240
CJBaker@cattco.org

Catherine L. Gross
Assistant to the Director
716-938-2213
CLGross@cattco.org

Naomi A. Gennings
NIMS Coordinator
716-938-2212
NAGennings@cattco.org

Robert F. Kuhn
EMS Coordinator
716-938-2244
RFKuhn@cattco.org

Brian M. Walters, D.O.
Medical Director
716-938-2244
BWalters@BRMC.com

Office Fax Number:
716-938-9170

Online at:
www.cattco.org/
emergency-services

Face Coverings Resources

(There are numerous resources online, but here are a few to jump start your search)

- Facebook
  - Mask Makers of Western NY
- www.MakeMasks2020.org
- www.Etsy.com
- Amazon.com (stocks appear to be limited)
- https://www.jiffyshirts.com/facecovers
- www.customink.com/products/categories/face-masks/205/styles
- https://www.shirtspace.com/shirtspace/accessories/9298-shirtspace-personal-facemask-3-pack
- Homemade face coverings made from pre-made kits
  - Joann's Fabrics Olean store can be contacted at 716-372-8990
- Find out if any of your employees have been making face coverings or has the ability to make face coverings
- Ask friends and family if they are able to make face coverings
- Utilize community based groups such as sewing groups, church groups, or others who could be of assistance
- Numerous patterns and videos online to make your own face coverings
  - CDC says cotton fabric is best
  - There should at least be 2 layers of fabric
  - https://www.cdc.gov/coronavirus/2019-ncov/prevent-getting-sick/diy-cloth-face-coverings.html

NEW YORK STATE OF OPPORTUNITY. Department of Health

ANDREW M. CUOMO
Governor

HOWARD A. ZUCKER, M.D., J.D.
Commissioner

SALLY DRESLIN, M.S., R.N.
Executive Deputy Commissioner

Interim Guidance on Executive Order 202.16 Requiring Face Coverings for Public and Private Employees Interacting with the Public During the COVID-19 Outbreak

April 14, 2020

Background:

In December 2019, a new respiratory disease called the novel coronavirus (COVID-19) was detected. COVID-19 is caused by a virus (SARS-CoV-2) that is part of a large family of viruses called coronaviruses. Recently, community-wide transmission of COVID-19 has occurred in the United States, including New York where the number of both confirmed and suspected cases is increasing. To reduce the community-wide transmission of COVID-19, Governor Andrew M. Cuomo has taken aggressive action through Executive Order 202, as amended, to combat the spread of this infectious disease, reducing the density of people in areas of common congregation by closing the in-person operations of non-essential businesses and prohibiting all non-essential gatherings of individuals of any size for any reason.

Executive Order:

Executive Order 202.16, issued on April 12, 2020, provides the following directive:

> *For all essential businesses or entities, any employees who are present in the workplace shall be provided and shall wear face coverings when in direct contact with customers or members of the public. Businesses must provide, at their expense, such face coverings for their employees. This provision may be enforced by local governments or local law enforcement as if it were an order pursuant to section 12 or 12-b of the Public Health Law. This requirement shall be effective Wednesday, April 15 at 8 p.m.*

Guidance:

Essential businesses, as well as state and local government agencies and authorities, must procure, fashion, or otherwise obtain face coverings and provide such coverings to employees who directly interact with the public during the course of their work at no-cost to the employee.

- Businesses are deemed essential by the Empire State Development Corporation (ESD), pursuant to the authority provided in Executive Order 202.6. Please visit the ESD website for specific information on essential businesses. For the purpose of this guidance, essential businesses shall also provide face coverings to contractors, including independent contractors.

- Face coverings include, but are not limited to, cloth (e.g. homemade sewn, quick cut, bandana), surgical masks, N-95 respirators, and face shields. Please visit the Centers for Disease Control and Prevention's "Coronavirus Disease 2019 (COVID-19)" website for information on cloth face covers and other types of personal protective equipment (PPE), as well as instructions on use and cleaning.

- Direct interaction with the public shall be determined by the employer, but, at a minimum, shall include any employee who is routinely within close contact (i.e. six feet or less) with members of the public, including but not limited to customers or clients.

- Employees are allowed to use their own face coverings, but shall not be mandated to do so by their employer. *Further, this guidance shall not prevent employees from wearing more protective coverings (e.g. surgical masks, N-95 respirators, or face shields) if the individual is already in possession of such PPE, or if the employer otherwise requires employees to wear more protective PPE due to the nature of their work (e.g. healthcare).*

- Employees are required to wear face coverings when in direct contact with members of the public, except where doing so would inhibit or otherwise impair the employee's health. *Employers are prohibited from requesting or requiring medical or other documentation from an employee who declines to wear a face covering due to a medical or other health condition that prevents such usage.*

- Employees who are unable to wear face coverings and are susceptible to COVID-19 based on the "Matilda's Law" criteria (i.e. individuals who are 70 years of age or older, individuals with compromised immune systems, and individuals with underlying illnesses) should consult with their employer to consider reasonable accommodations, including but not limited to different PPE, alternate work location, or alternate work assignment with fewer interactions with the public. Employers should work with their employees to see if they can be accommodated to ensure the employee can continue to deliver essential services in the safest manner possible.

- If an employer is unable to procure, fashion, or otherwise obtain face coverings for their employees, they may consult with their local office of emergency management to determine if extra supplies exist within the municipality for this purpose and, if so, they may submit a request for face coverings. Please note that quantites are extremely limited and are prioritized for health care workers and first responders. *Not being able to source face coverings does not relieve an employer's obligation to provide such face coverings to their employees.*

- Nothing in this guidance shall supercede the respiratory protection equipment requirements set forth by the United States Department of Labor's Occupational Safety and Health Administration (OSHA).

Additional Information:
New York State Coronavirus (COVID-19) Website
https://coronavirus.health.ny.gov/

United States Centers for Disease Control and Prevention Coronavirus (COVID-19) Website
https://www.cdc.gov/coronavirus/2019-ncov/index.html

Use of Cloth Face Coverings to Help Slow the Spread of COVID-19

How to Wear Cloth Face Coverings

Cloth face coverings should—

- fit snugly but comfortably against the side of the face
- be secured with ties or ear loops
- include multiple layers of fabric
- allow for breathing without restriction
- be able to be laundered and machine dried without damage or change to shape

CDC on Homemade Cloth Face Coverings

CDC recommends wearing cloth face coverings in public settings where other social distancing measures are difficult to maintain (e.g., grocery stores and pharmacies), **especially** in areas of significant community-based transmission.

CDC also advises the use of simple cloth face coverings to slow the spread of the virus and help people who may have the virus and do not know it from transmitting it to others. Cloth face coverings fashioned from household items or made at home from common materials at low cost can be used as an additional, voluntary public health measure.

Cloth face coverings should not be placed on young children under age 2, anyone who has trouble breathing, or is unconscious, incapacitated or otherwise unable to remove the cloth face covering without assistance.

The cloth face coverings recommended are not surgical masks or N-95 respirators. Those are critical supplies that must continue to be reserved for healthcare workers and other medical first responders, as recommended by current CDC guidance.

Should cloth face coverings be washed or otherwise cleaned regularly? How regularly?

Yes. They should be routinely washed depending on the frequency of use.

How does one safely sterilize/clean a cloth face covering?

A washing machine should suffice in properly washing a cloth face covering.

How does one safely remove a used cloth face covering?

Individuals should be careful not to touch their eyes, nose, and mouth when removing their cloth face covering and wash hands immediately after removing.

cdc.gov/coronavirus

CS316353B 04/10/2020, 8:07 PM

Sewn Cloth Face Covering

Materials

- Two 10"x6" rectangles of cotton fabric
- Two 6" pieces of elastic (or rubber bands, string, cloth strips, or hair ties)
- Needle and thread (or bobby pin)
- Scissors
- Sewing machine

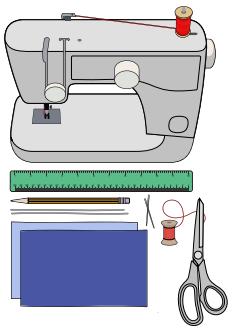

Tutorial

1. Cut out two 10-by-6-inch rectangles of cotton fabric. Use tightly woven cotton, such as quilting fabric or cotton sheets. T-shirt fabric will work in a pinch. Stack the two rectangles; you will sew the cloth face covering as if it was a single piece of fabric.

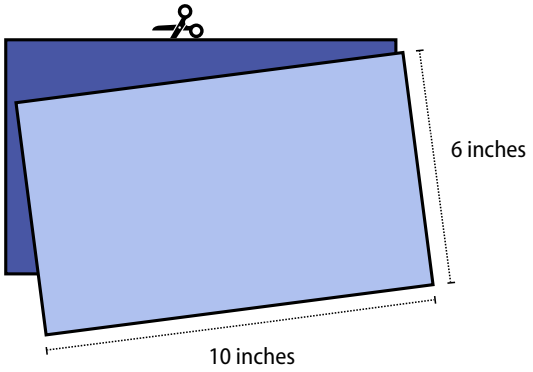

2. Fold over the long sides ¼ inch and hem. Then fold the double layer of fabric over ½ inch along the short sides and stitch down.

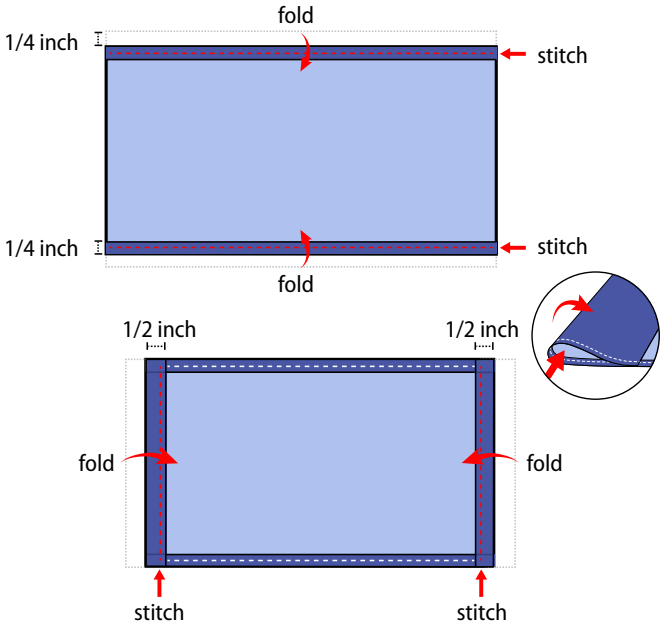

3. Run a 6-inch length of 1/8-inch wide elastic through the wider hem on each side of the cloth face covering. These will be the ear loops. Use a large needle or a bobby pin to thread it through. Tie the ends tight.
Don't have elastic? Use hair ties or elastic head bands. If you only have string, you can make the ties longer and tie the cloth face covering behind your head.

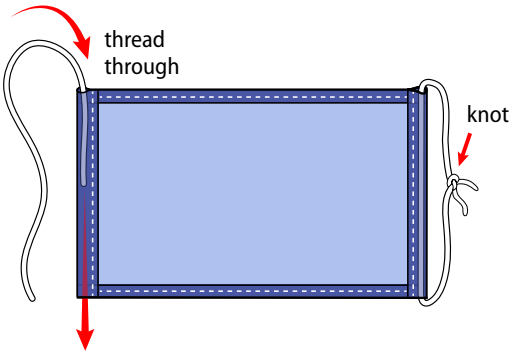

4. Gently pull on the elastic so that the knots are tucked inside the hem.
Gather the sides of the cloth face covering on the elastic and adjust so the mask fits your face. Then securely stitch the elastic in place to keep it from slipping.

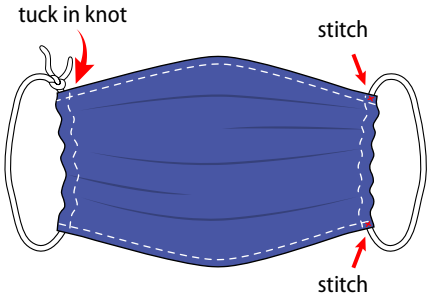

Quick Cut T-shirt Cloth Face Covering (no sew method)

Materials

- T-shirt
- Scissors

Tutorial

1.

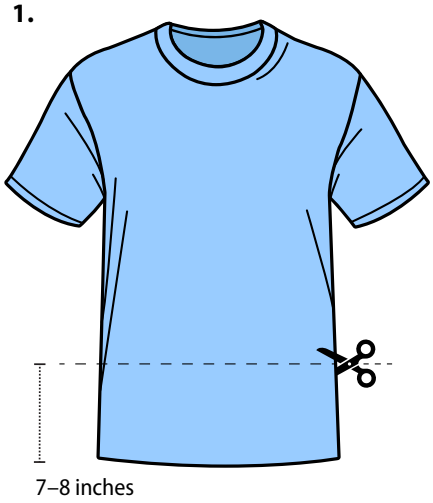

2.

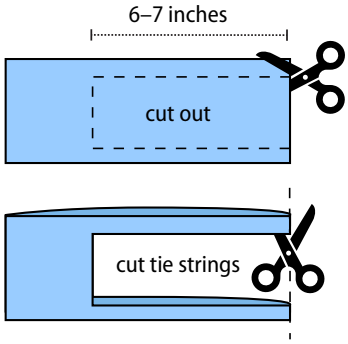

3.

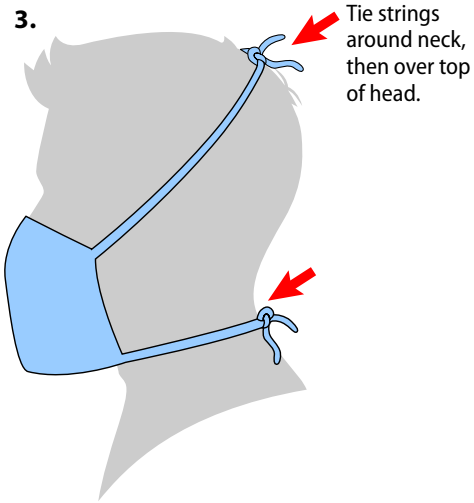

Bandana Cloth Face Covering (no sew method)

Materials

- Bandana (or square cotton cloth approximately 20”x20”)
- Rubber bands (or hair ties)
- Scissors (if you are cutting your own cloth)

Tutorial

1.

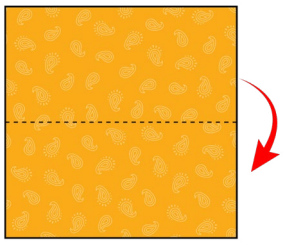

Fold bandana in half.

2.

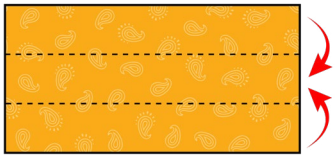

Fold top down. Fold bottom up.

3.

Place rubber bands or hair ties about 6 inches apart.

4.

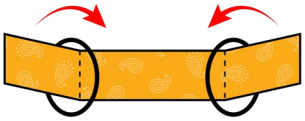

Fold side to the middle and tuck.

5.
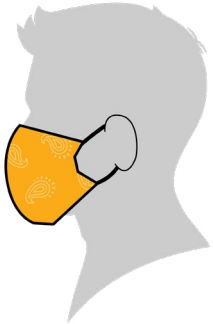
6.